www.osram.us/traxon

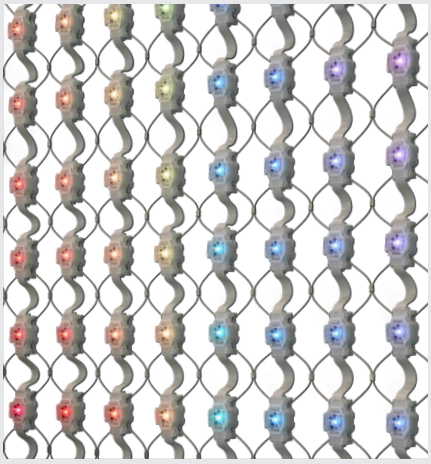

Product Highlights:

- Various color solutions for different façade lighting design requirements (RGBW / RGB / Dynamic White / White)
- Long dot string up to 80 dots per string
- Flexible solution with different mounting options (Mesh-Grid-System, wire mounting & clip)
- Huge data system with PXL Distributor Pro 8
- 5 years warranty
- IP66 & 67

Light is flexible

Allegro Dot XS

The smallest and most flexible media dot for outdoor applications.

Light is OSRAM

Our Brands

traxon e:cue

OSRAM

Allegro Dot XS

Allegro Dot XS is the newest and smallest member of the intelligent Allegro Dot family which enables longer chains of illuminated Dots. The Allegro Dot XS is ideal for outdoor media applications, where it can be integrated seamlessly into the facade, or it can be installed to float in the air with our highly transparent mounting options. Each system is driven by the Pixel Distributor Pro 8 (PDP8) which integrates power and data into one unit, reducing the space required for installation components. Each PDP8 can support up to 8 Allegro Dot XS outputs with e:net IN and OUT.

Advantages & Benefits

- Various color solutions for different façade lighting design requirements (RGBW / RGB / Dynamic White / White)
- Up to 80 dots per string
- Flexible solution with four mounting options (Mesh-Grid-System , wire mounting, clip & DIN Rail)
- 5 year warranty
- IP66 & 67

Applications

- Medium resolution media façade
- Creative entertainment
- Backlighting media

Dimensions

Allegro Dot XS Clear

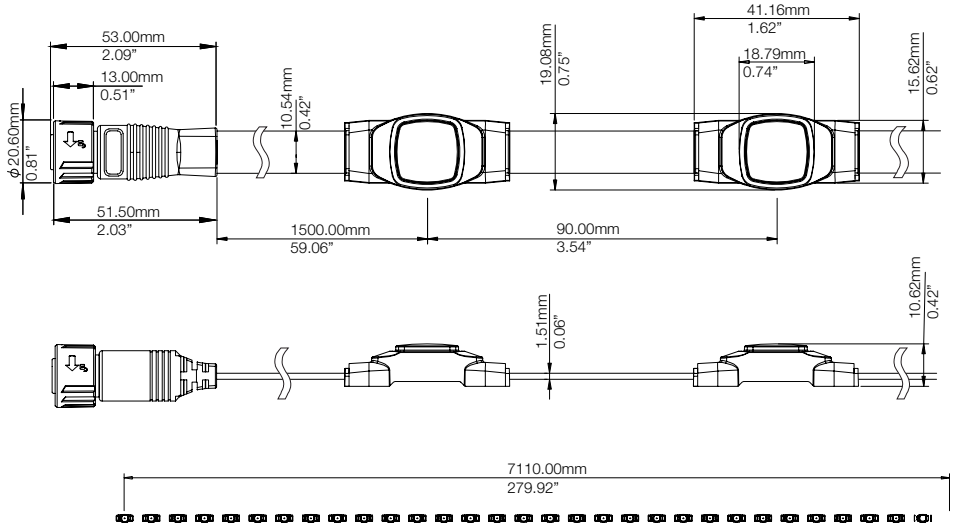

80 Allegro Dot XS string

Allegro Dot XS

Dimensions

Allegro Dot XS Diffused

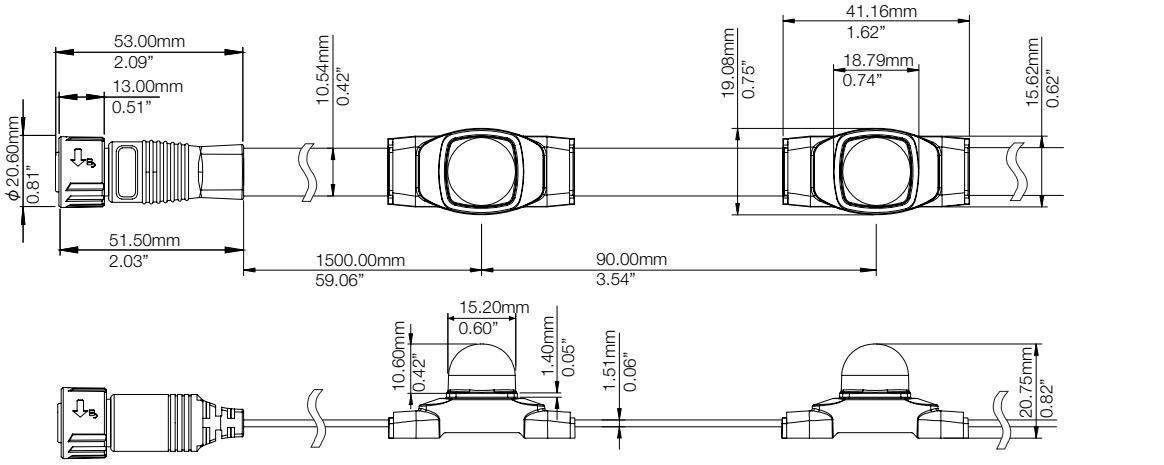

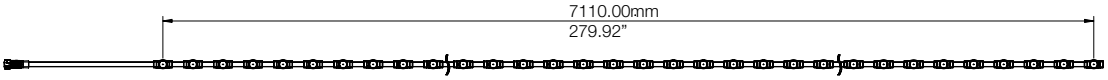

80 Allegro Dot XS string

PXL Distributor Pro 8

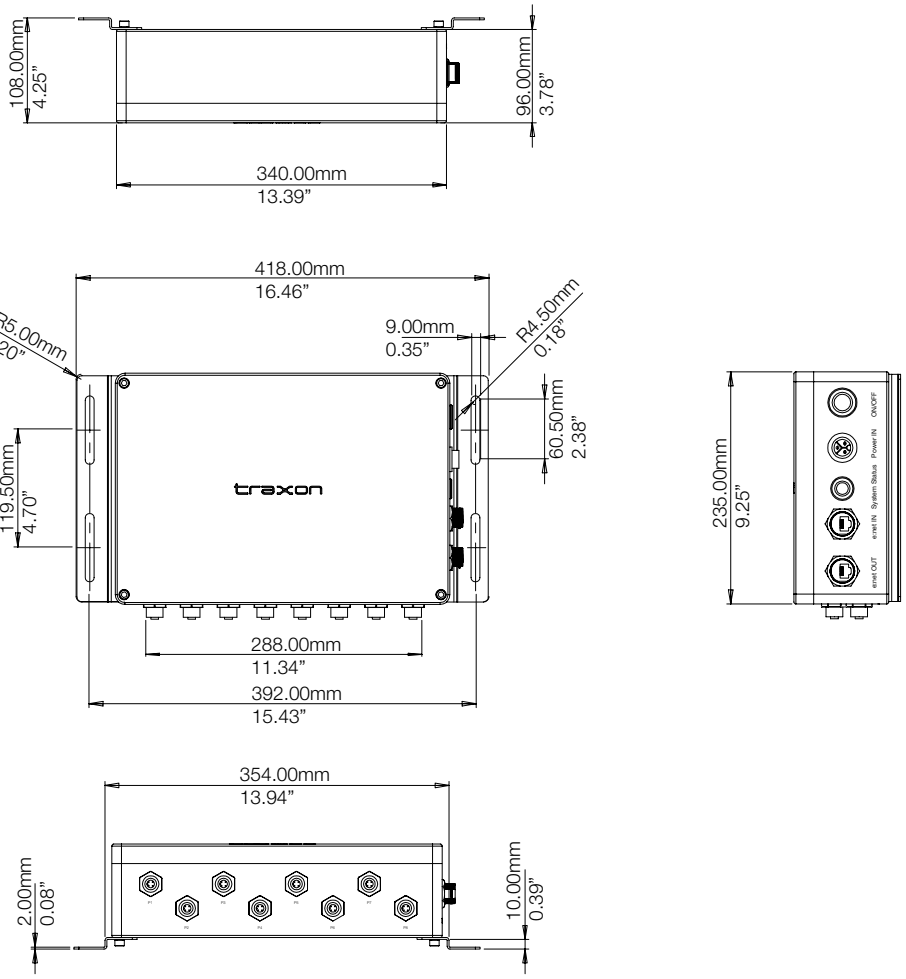

Allegro Dot XS

Mounting

Stainless Steel Mesh Grid - High Density Dot Media Solution

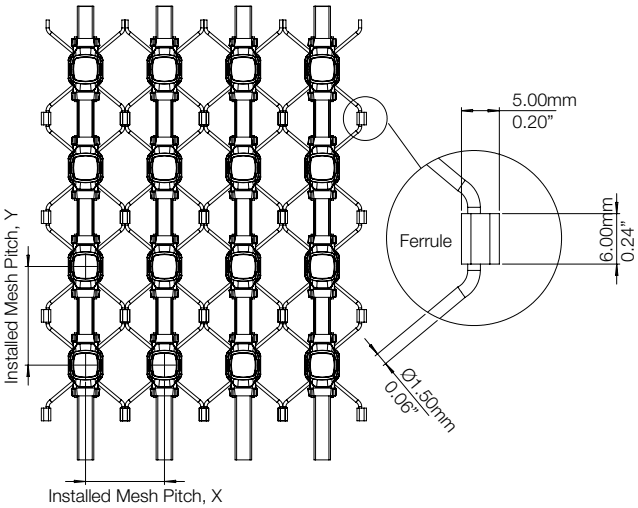

NOTE: The Mounting Bracket is designed to fit to this Ferrule dimension.

Standard Mesh Grid

	Installed Mesh Pitch, x (mm)	Installed Mesh Pitch, y (mm)	Weight of MG / m² (g)
MG15-40	45	62	937
MG15-50 (Standard)	60	77	722
MG15-60	80	84	517
MG15-70	90	105	423
MG15-80	100	117	370
MG15-90	125	125	320
MG15-100	135	140	282
MG15-120	170	175	204

NOTE: Pitch measured when the mesh grid is fully st retched.

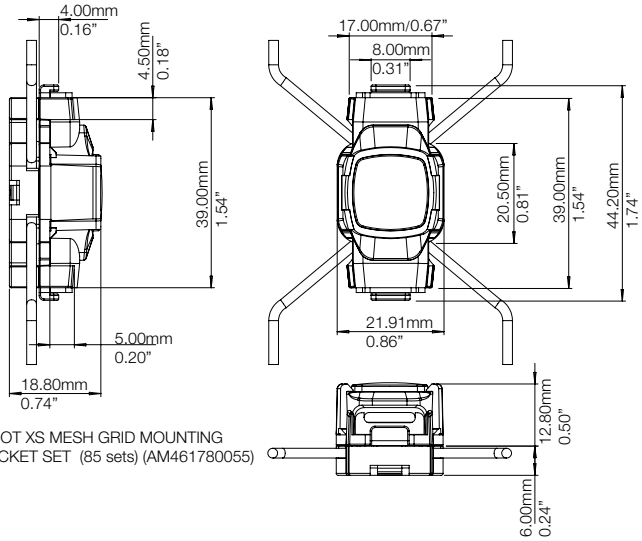

AL DOT XS MESH GRID MOUNTING BRACKET SET (85 sets) (AM461780055)

Wire Mounting - Low Density / Single String Installation Solution

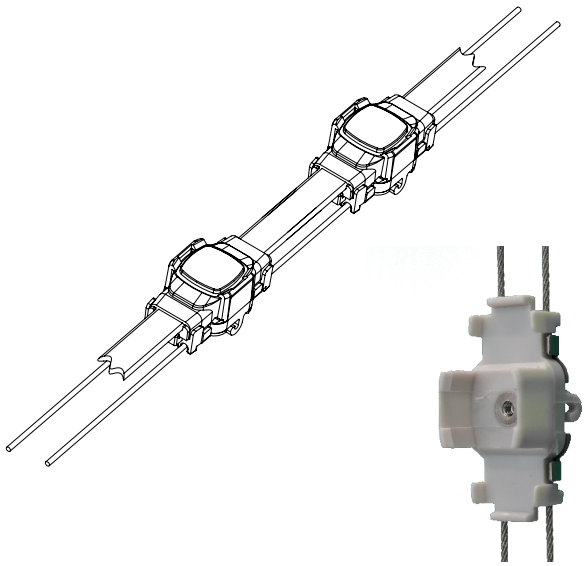

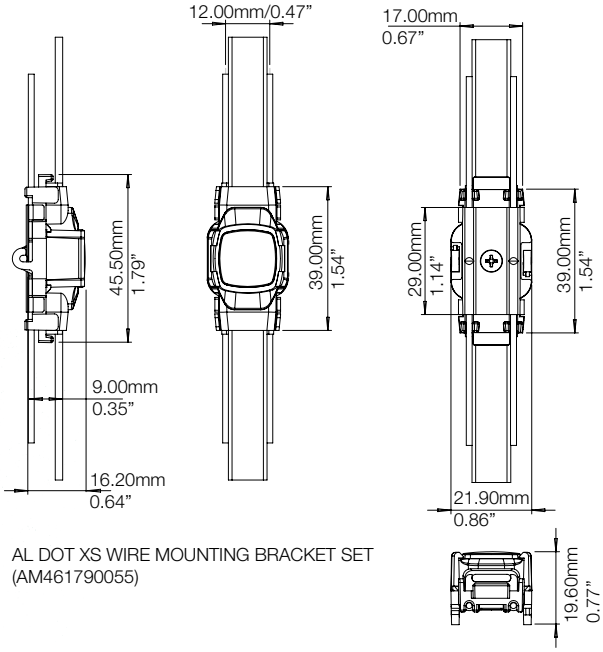

AL DOT XS WIRE MOUNTING BRACKET SET (AM461790055)

Allegro Dot XS

Mounting

Dot Clip - Low Density / Single String Installation Solution

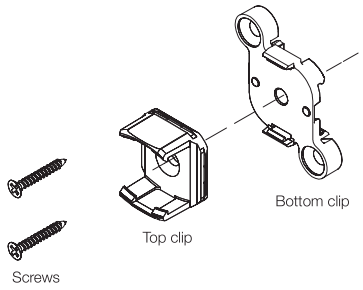

AL DOT XS CLIP SET (AM461800055)

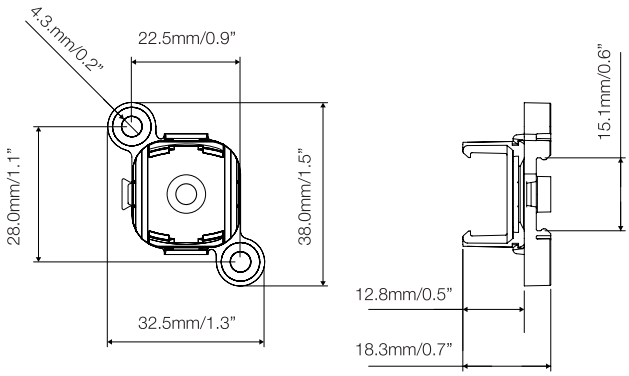

Product Reference	IC		AC/DC	V	W	∠°	lm	l [in]	W [in]	h [in]	°F min.-max.	CONTROL
Fixture												
AL DO XS CR RGBW65 80PPF 90P 1.5M	AM461050055	RGBW	DC	30	0.6	110	17	1.6	0.7	0.4	-13 to +122	e:net
AL DO XS DF RGBW65 80PPF 90P 1.5M	AM461060055	RGBW	DC	30	0.6	150	15	1.6	0.7	0.8	-13 to +122	e:net
AL DO XS CR RGB 80PPF 90P 1.5M	AM461070055	RGB	DC	30	0.43	110	7	1.6	0.7	0.4	-13 to +122	e:net
AL DO XS DF RGB 80PPF 90P 1.5M	AM461080055	RGB	DC	30	0.43	150	6	1.6	0.7	0.8	-13 to +122	e:net
AL DO XS CR DW2765 80PPF 90P 1.5M	AM461090055	Dynamic White	DC	30	0.5	110	26	1.6	0.7	0.4	-13 to +122	e:net
AL DO XS DF DW2765 80PPF 90P 1.5M	AM461100055	Dynamic White	DC	30	0.5	150	22	1.6	0.7	0.8	-13 to +122	e:net
AL DO XS CR WW 80PPF 90P 1.5M	AM461110055	Warm White	DC	30	0.5	110	25	1.6	0.7	0.4	-13 to +122	e:net
AL DO XS DF WW 80PPF 90P 1.5M	AM461120055	Warm White	DC	30	0.5	150	21	1.6	0.7	0.8	-13 to +122	e:net
AL DO XS CR CW 80PPF 90P 1.5M	AM461130055	Cold White	DC	30	0.5	110	27	1.6	0.7	0.4	-13 to +122	e:net
AL DO XS DF CW 80PPF 90P 1.5M	AM461140055	Cold White	DC	30	0.5	150	23	1.6	0.7	0.8	-13 to +122	e:net
Mounting Accessories												
MG15-50 (For standard AL DO XS)*												
AL DO XS MG BRACKET SET 85	AM461780055											
AL DO XS WIRE BRACKET SET 85	AM461790055											
AL DO XS CLIP SET 85	AM461800055											
Connection Accessories	AM424890055											
PXL DISTRIBUTOR PRO 8	AM461810055		AC	100-277	10			418	235	108	-13 to +122	e:net
AL DO XS LEAD CABLE 3.5M	AM461760055											
3PIN INSTALL CONN PD8 IP67	AM461770055											

*Check with your local Traxon e:cue regional office for additional customization options.

Technical data subject to variation and change without notice.

OSRAM copyrights reserved 2021. Subject to change without notice. Errors and omission excepted.
All images used are for illustrative purposes only and not intended to reflect actual product performance.

Traxon e:cue
Sales enquiry: Information.Traxon@traxontechnologies.com
www.osram.us/traxon